REVISIONS			
LTR	DESCRIPTION	DATE	APPROVED
A	QUICK TWIST SERIES	01/01/04	JAG

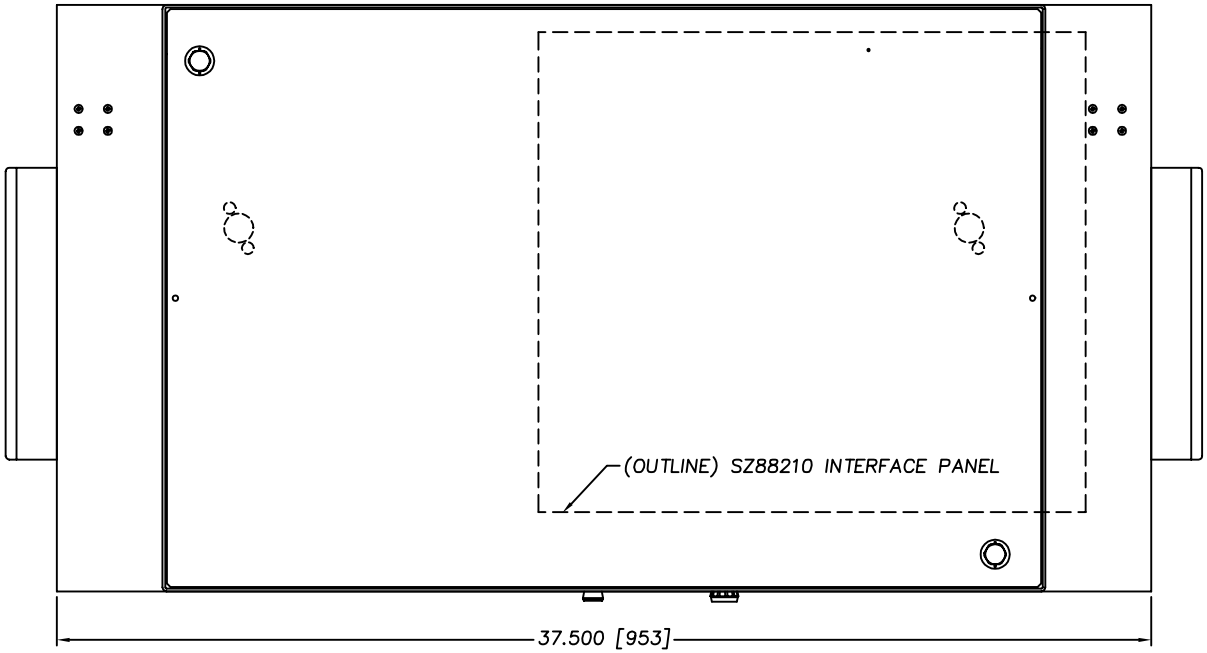

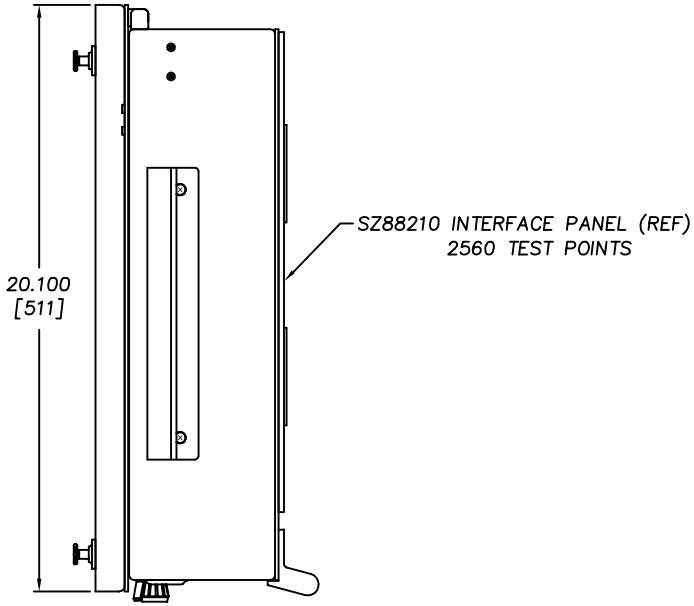

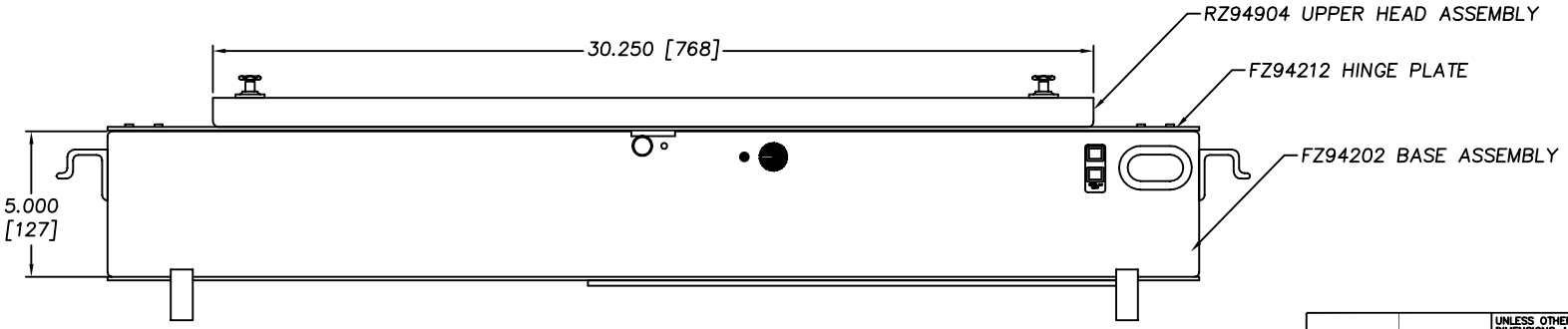

THIS DRAWING IS FOR ASSEMBLY REFERENCE ONLY

NEXT ASSY	USED ON	UNLESS OTHERWISE SPECIFIED DIMENSIONS ARE IN INCHES (MM) TOLERANCES ARE: .XX ±.015 .XXX ±.005 ANGLES ±1/2°	H+W TEST PRODUCTS SEEKONK, MASSACHUSETTS
APPLICATION		MATERIAL: SEE BILL OF MATERIALS	FIXTURE ASSY (18x28 UUT) 2560 PT. I/F TERADYNE SPECTRUM 8855
		FINISH: NONE	SIZE D · FSCM NO. · DRAWING NO. RZ94024 · REV. A
		DO NOT SCALE DRAWING	SCALE FULL · DRAWN JAG 10/22/96 · SHEET 1 OF 1

FILE NO. RZ94024A