REVISIONS			
LTR	DESCRIPTION	DATE	APPROVED
A	QUICK TWIST SERIES	01/01/04	JAG

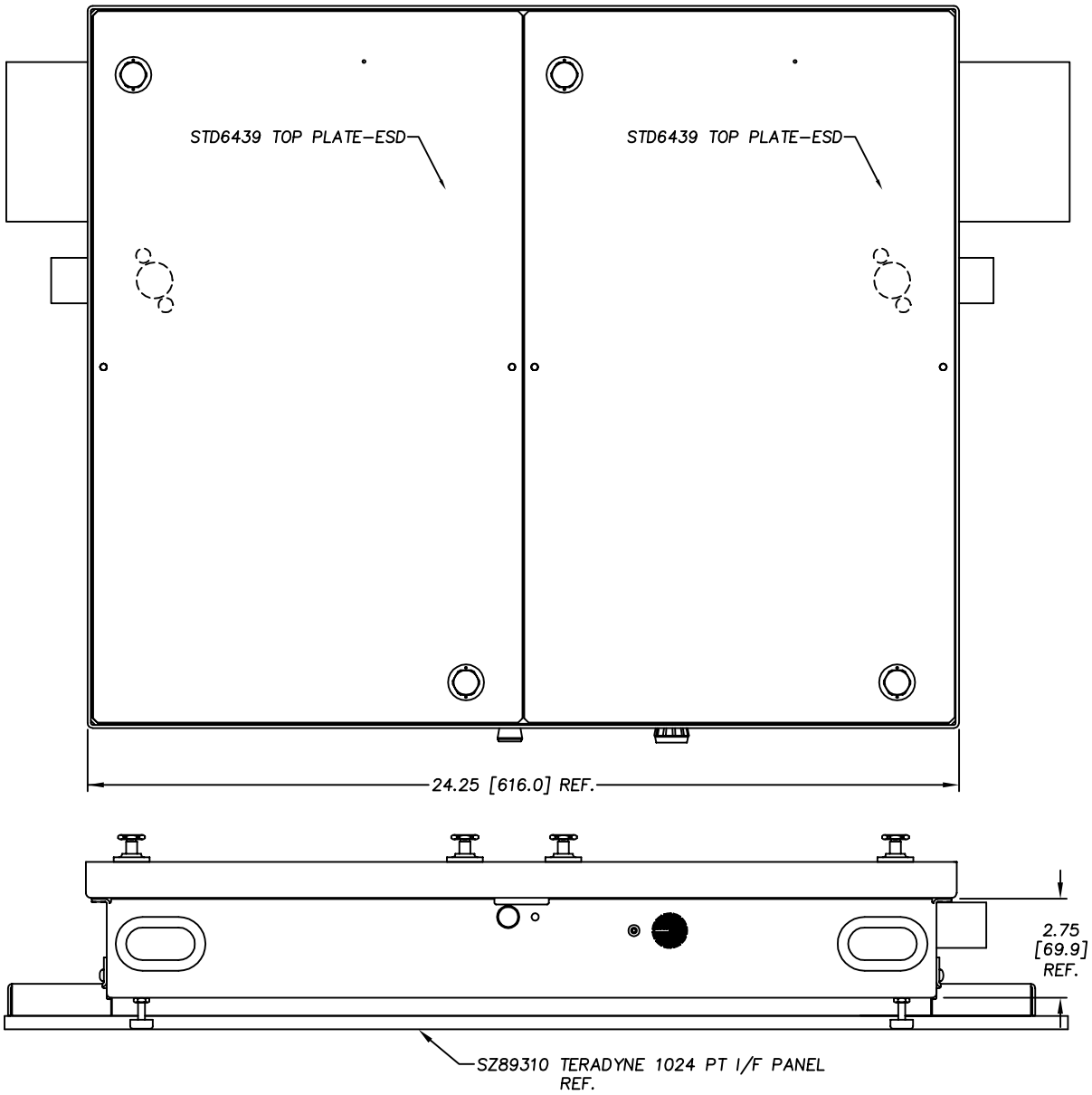

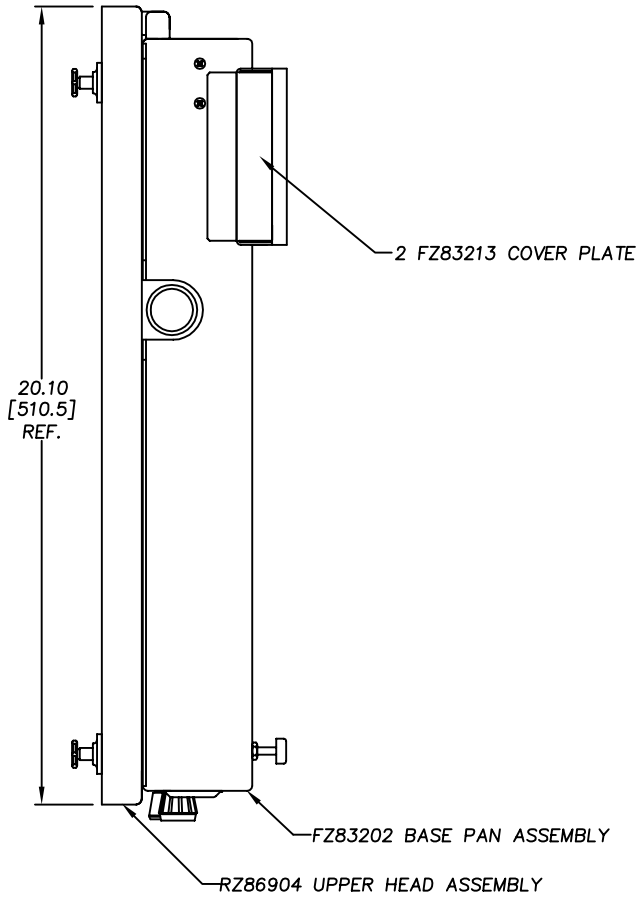

NEXT ASSY	USED ON	UNLESS OTHERWISE SPECIFIED DIMENSIONS ARE IN INCHES (MM) TOLERANCES ARE: .XX ±.015 .XXX ±.005 ANGLES ±1/2°	H+W TEST PRODUCTS SEEKONK, MASSACHUSETTS
APPLICATION		MATERIAL: SEE BILL OF MATERIALS	FIXTURE ASSEMBLY TERADYNE 800 (18x10 UUT)
		FINISH: NONE	SIZE: E · FSCM NO. · DRAWING NO.: RZ86024 · REV.: A
		DO NOT SCALE DRAWING	SCALE: FULL · DRAWN: JAG 7/18/96 · SHEET 1 OF 1

FILE NO. RZ86024A