REVISIONS			
LTR	DESCRIPTION	DATE	APPROVED
A	QUICK TWIST SERIES	01/01/04	JAG

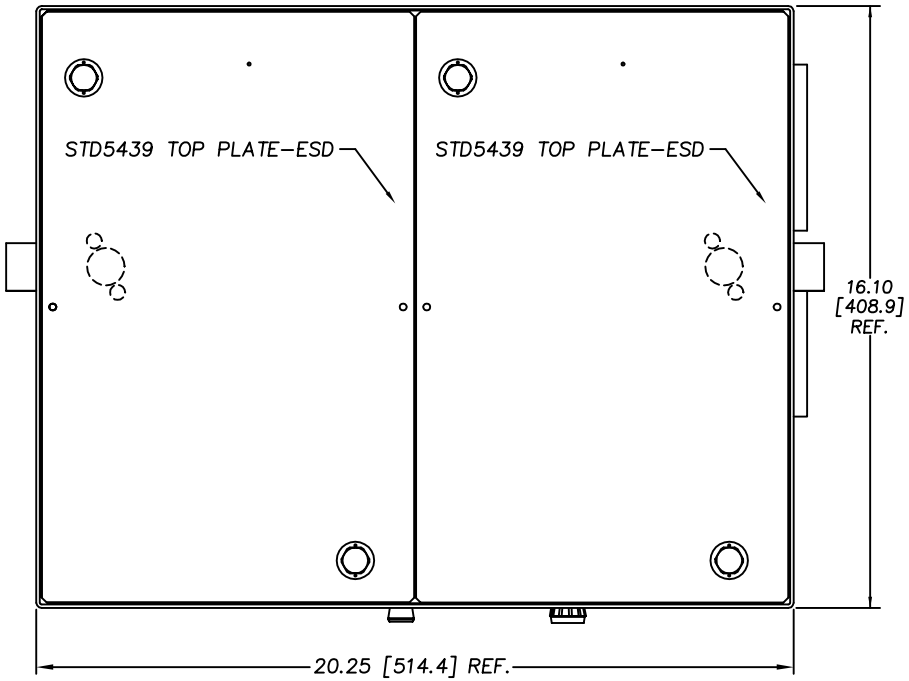

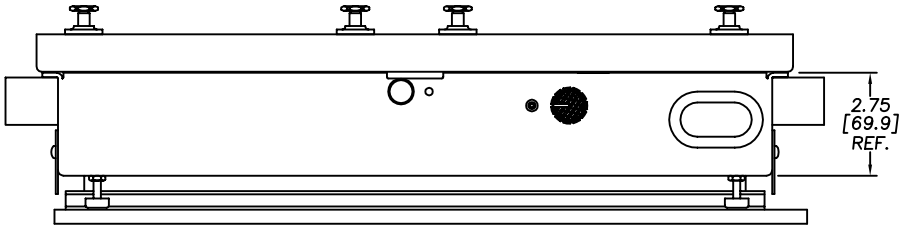

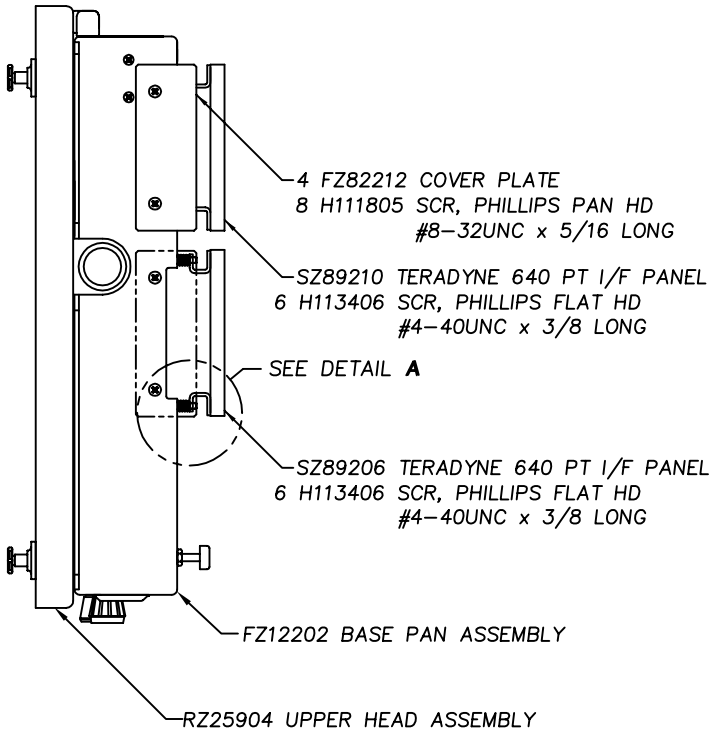

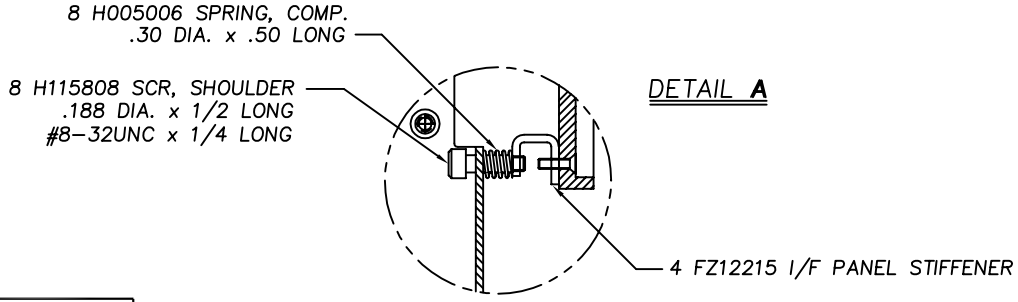

NEXT ASSY	USED ON	UNLESS OTHERWISE SPECIFIED DIMENSIONS ARE IN INCHES (MM) TOLERANCES ARE: .XX ±.015 .XXX ±.005 ANGLES ±1/2°	H+W TEST PRODUCTS SEEKONK, MASSACHUSETTS
APPLICATION		MATERIAL: SEE BILL OF MATERIALS	FIXTURE ASSEMBLY TERADYNE 1820 (14x8 UUT)
		FINISH: NONE	SIZE: E; FSCM NO.: ; DRAWING NO.: RZ25004; REV.: A
		DO NOT SCALE DRAWING	SCALE: FULL; DRAWN: JAG 7/18/96; SHEET 1 OF 1

FILE NO. RZ25004A