REVISIONS			
LTR	DESCRIPTION	DATE	APPROVED
A	RELEASE TO PRODUCTION	02/06/2004	JAG

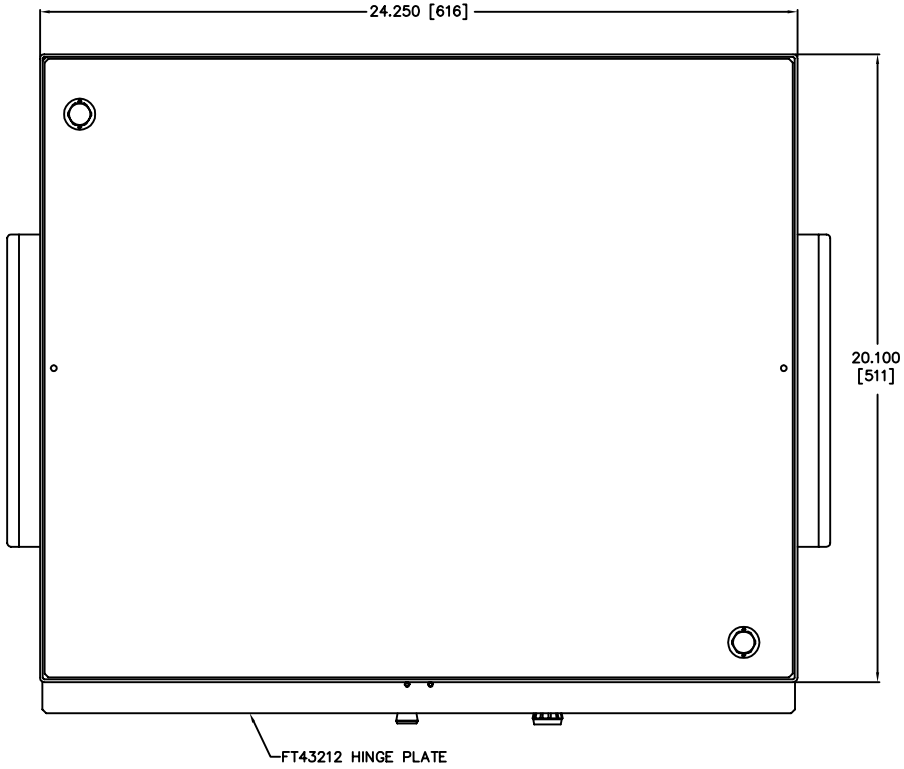

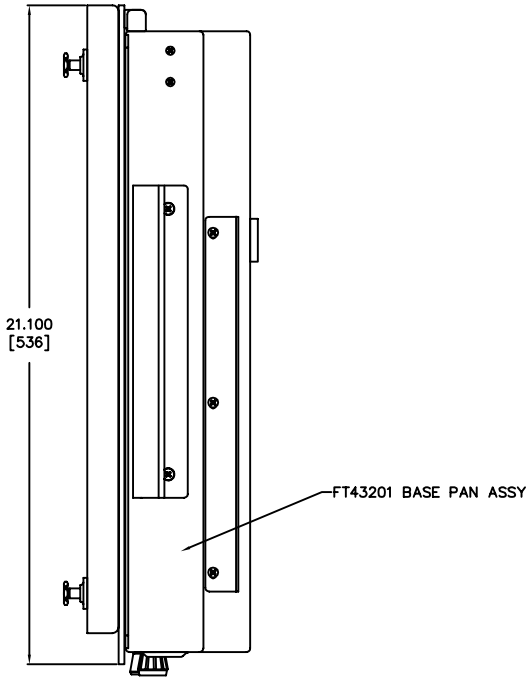

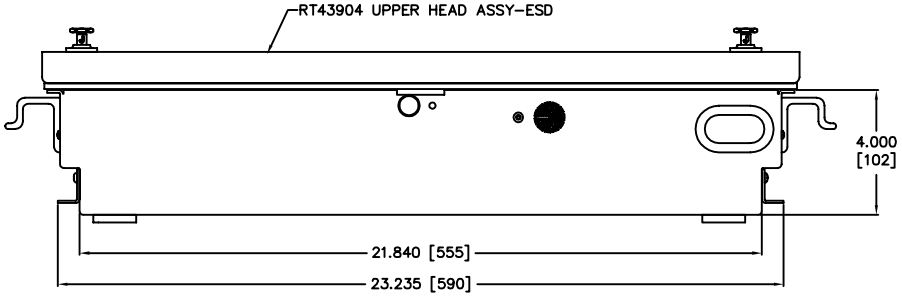

NEXT ASSY	USED ON	
APPLICATION		

UNLESS OTHERWISE SPECIFIED DIMENSIONS ARE IN INCHES [MM]
TOLERANCES ARE:

.XX	.XXX	ANGLES
±.015	±.005	±1/2°

MATERIAL: SEE BOM

FINISH: NONE

DO NOT SCALE DRAWING

H+W TEST PRODUCTS
SEEKONK, MASSACHUSETTS

FIXTURE ASSY (18x22 UUT)
TERADYNE TESTSTATION LH

SIZE	FSCM NO.	DRAWING NO.	REV.
D		RT43004	A

SCALE FULL | DRAWN JAG 02/06/2004 | SHEET 2 OF 2

FILE NO. RT43004A