REVISIONS			
LTR	DESCRIPTION	DATE	APPROVED
A	QUICK TWIST SERIES	01/01/07	JAG

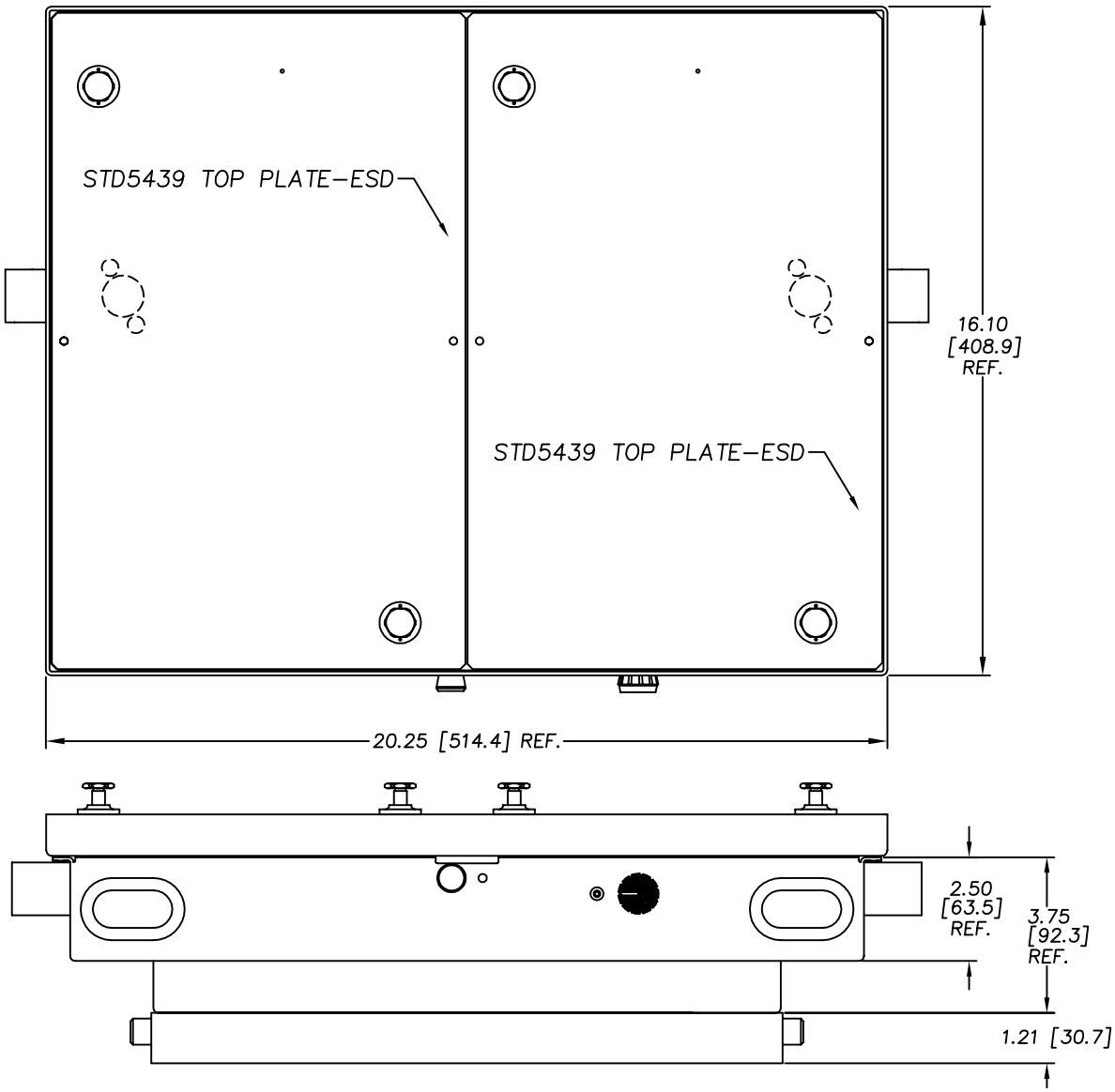

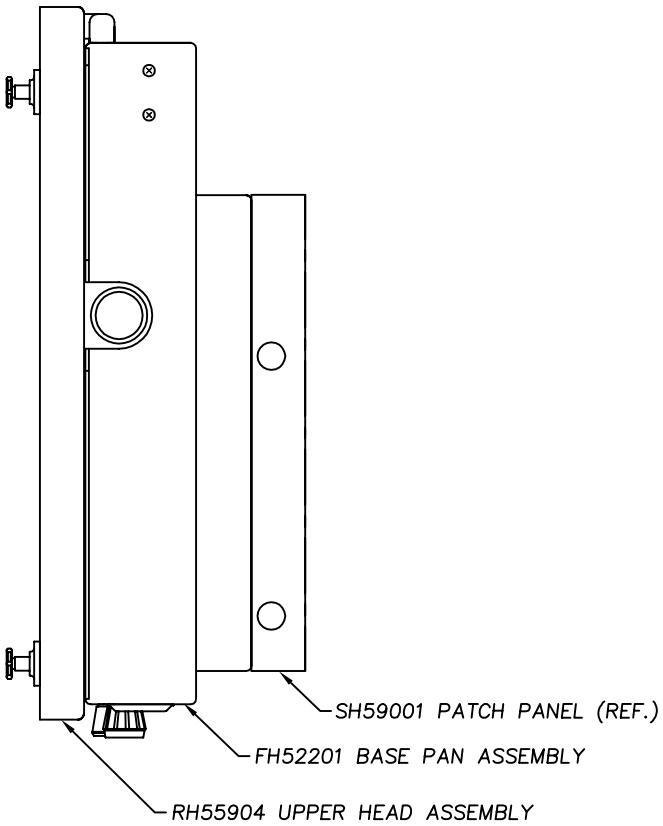

NEXT ASSY / USED ON	UNLESS OTHERWISE SPECIFIED DIMENSIONS ARE IN INCHES (MM) TOLERANCES ARE: .XX ±.015 .XXX ±.005 ANGLES ±1/2°	H+W TEST PRODUCTS SEEKONK, MASSACHUSETTS
APPLICATION	MATERIAL: SEE BILL OF MATERIALS	FIXTURE ASSEMBLY HP 3065 (14x8 UUT)
	FINISH: NONE	SIZE: D / FSCM NO. / DRAWING NO.: RH55004 / REV.: A
	DO NOT SCALE DRAWING	SCALE: FULL / DRAWN: JAG 11/22/95 / SHEET 1 OF 1

FILE NO. RH55004A