REVISIONS			
LTR	DESCRIPTION	DATE	APPROVED
A	QUICK TWIST SERIES	01/01/04	JAG

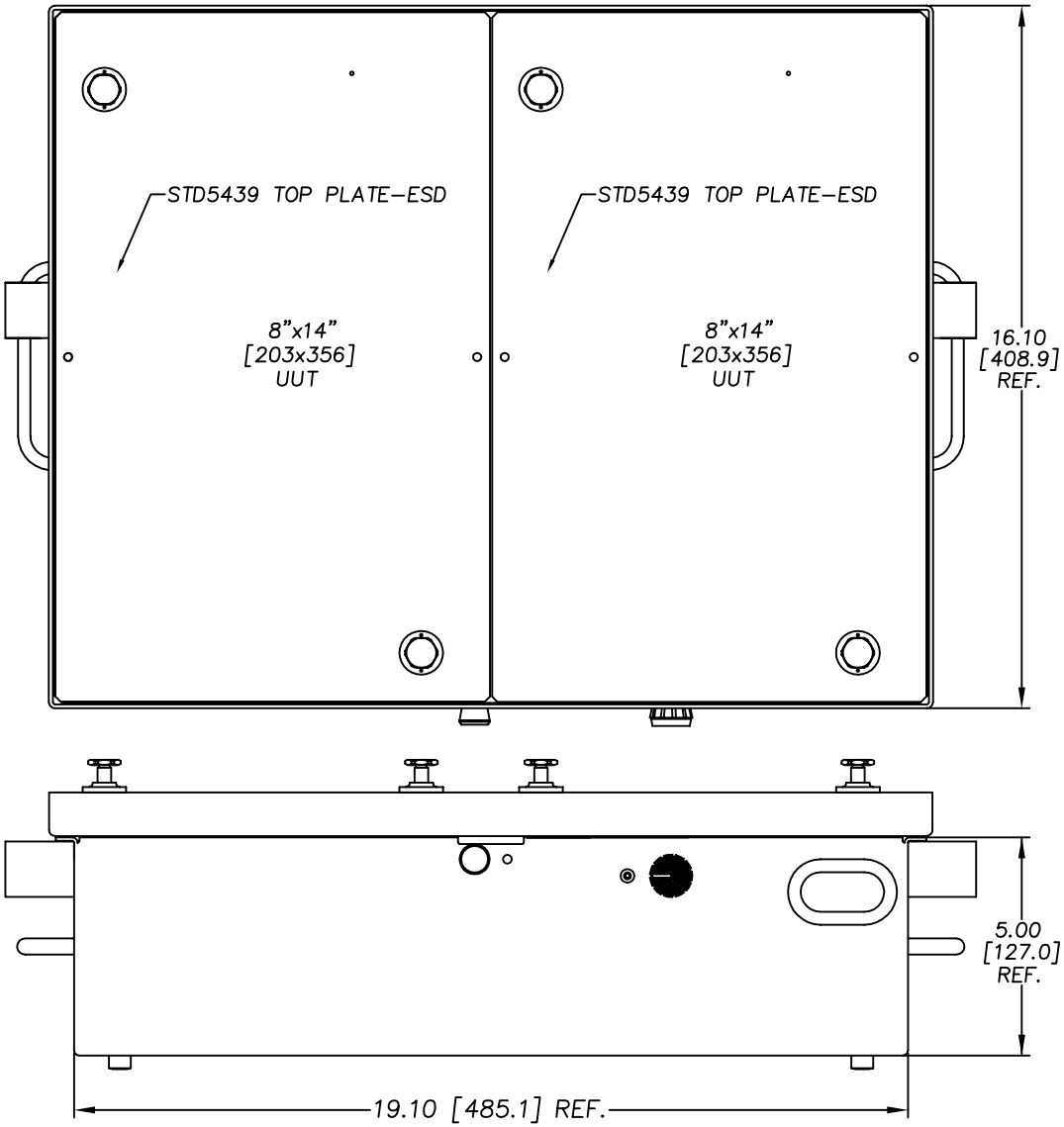

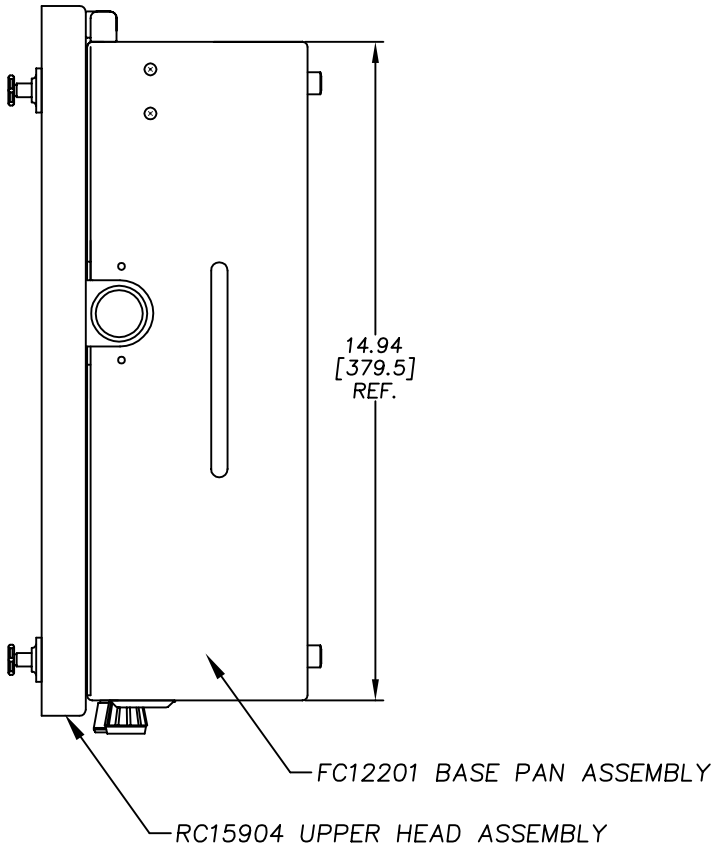

NEXT ASSY / USED ON	UNLESS OTHERWISE SPECIFIED DIMENSIONS ARE IN INCHES (MM) TOLERANCES ARE: .XX ±.015 .XXX ±.005 ANGLES ±1/2°	H+W TEST PRODUCTS SEEKONK, MASSACHUSETTS
	MATERIAL: SEE BILL OF MATERIALS	FIXTURE ASSEMBLY SYSTEM NON–SPECIFIC
	FINISH: NONE	SIZE D / FSCM NO. / DRAWING NO. RC15004 / REV. A
APPLICATION	DO NOT SCALE DRAWING	SCALE FULL / DRAWN JAG 08/11/98 / SHEET 1 OF 1

FILE NO. RC15004A