REVISIONS			
LTR	DESCRIPTION	DATE	APPROVED
A	QUICK TWIST SERIES	01/01/04	JAG

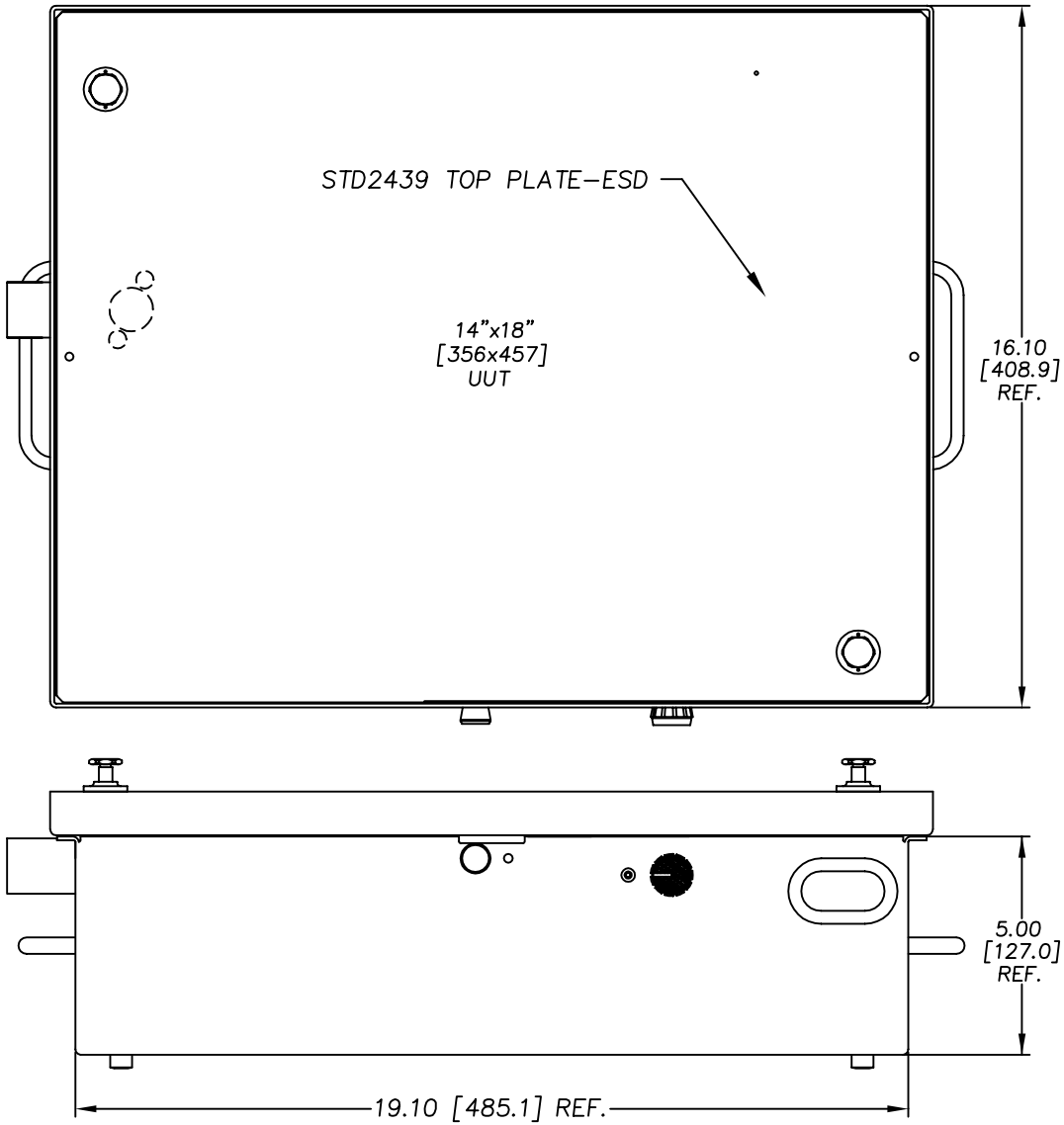

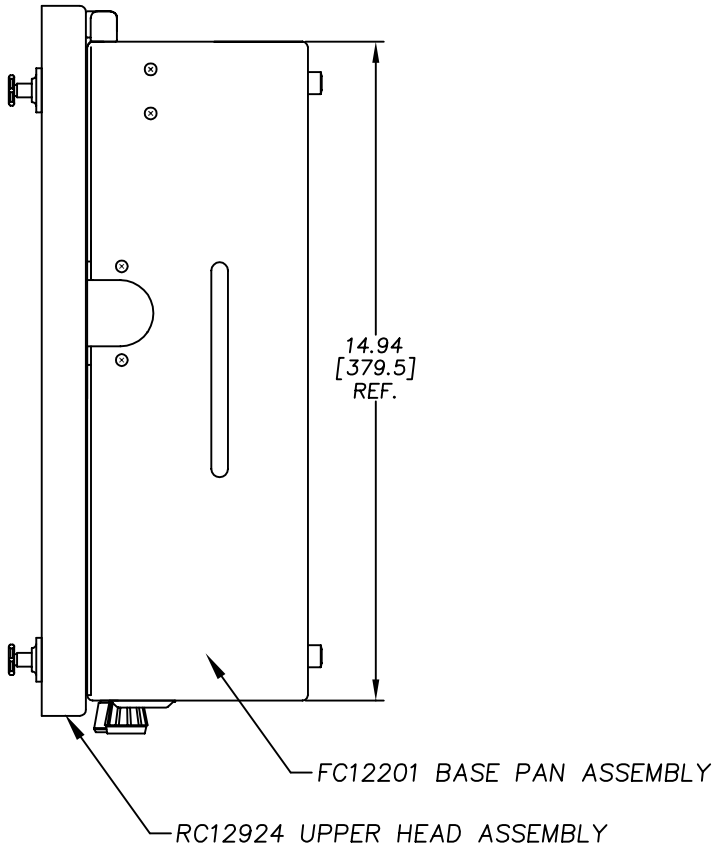

NEXT ASSY	USED ON	
APPLICATION		

UNLESS OTHERWISE SPECIFIED DIMENSIONS ARE IN INCHES (MM)
TOLERANCES ARE:

.XX	.XXX	ANGLES
±.015	±.005	±1/2°

MATERIAL: SEE BILL OF MATERIALS

FINISH: NONE

DO NOT SCALE DRAWING

H+W TEST PRODUCTS
SEEKONK, MASSACHUSETTS

FIXTURE ASSEMBLY
SYSTEM NON-SPECIFIC

SIZE	FSCM NO.	DRAWING NO.	REV.
D		RC12024	A

SCALE FULL | DRAWN JAG 08/11/98 | SHEET 1 OF 1

FILE NO. RC12024A